

## MINI A

| | |
|---|---|
| **Item code** | **86.D104.5313.01** |
| **Product type** | **Indoor** |
| **Category** | **Downlights** |
| **Family** | **MINI** |
| **Subfamily** | **MINI A** |
| **Pictograms** | CRI 90 · CE · Driver INCL. · On Off · DALI · IP 20 |

| **Dimensions** | |
|---|---|
| **Product dimensions (mm)** | **ø50*H153mm** |

### Scheme

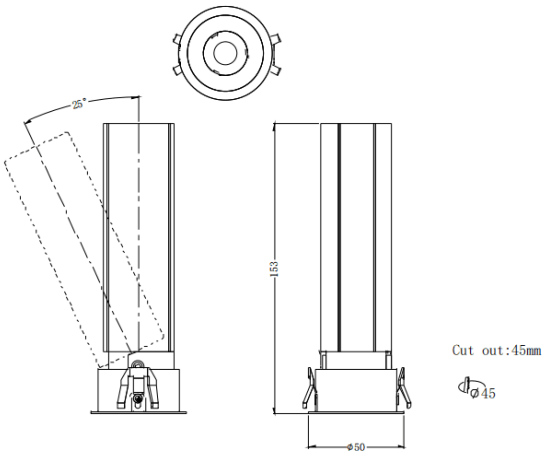


| **Product** | |
|---|---|
| **Real power (W)** | **10** |
| **Real luminous flux (Lm)** | **840** |
| **Luminous efficiency (Lm/W)** | **84** |
| **Beam angle (º)** | **15** |
| **Life time (h)** | **50000 h L80B10** |
| **IP** | **20** |
| **Control gear** | **DALI** |
| **Colour temperature (K)** | **3000** |
| **Colour consistency (SDCM)** | **SDCM3** |
| **CRI** | **90** |